MODEL LSM100

Micro Parallelogram Load Cell

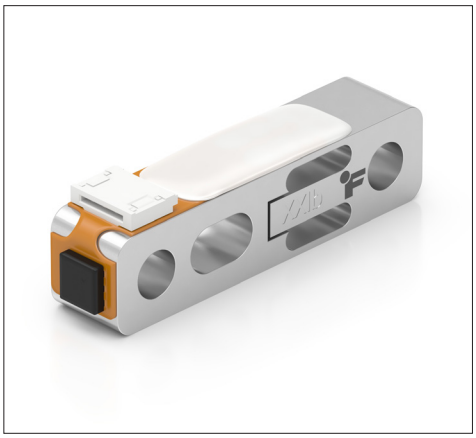

FEATURES

- Lightweight at 5.6 grams and compact form factor of 0.3" [8.0 mm] height and 0.22" [5.6 mm] width.
- Side-mount design fits space-constrained applications.
- Shear force measurement enabled by side-mount configuration.
- Can integrate with VDC, mA, SPI, RS-422, USB, BLE, RS-232, UART output and more.
- Integrated Ø3mm pin-compatible loading and mounting provisions for repeatable fixturing and alignment.
- Safe overload stops in tension and compression up to 150% of Rated Output.
- Integrated IEEE 1451.4 TEDS auto-recognition minimizes setup errors.
- Designed for OEM high volume applications.
- Heat-treated, aerospace-grade stainless steel enhances durability, linearity, and off-center loading performance.

SPECIFICATIONS	
PERFORMANCE	
Nonlinearity	±0.2% of R.O. (5 and 10 lb) ±0.3% (25 and 50 lb)
Hysterisis	±0.2% of R.O. (5 and 10 lb) ±0.3% (25 and 50 lb)
Nonrepeatability	±0.1% of R.O.
ELECTRICAL	
Rated Output (R.O.)	See Capacities table
Excitation (VDC or VAC)	10 max
Bridge Resistance	350 Ohm nom
Connection	6 Position FFC FPC, Contact Top, 0.020" (0.50mm) Pitch, Molex #0512810698
MECHANICAL	
Weight (approximate)	0.01 lb [5.6 g]
Safe Overload	150% of R.O.
Material	17-4 PH S.S.
IP Rating	IP40
TEMPERATURE	
Operating Temperature	-4 to 185°F [-20 to 85°C]
Compensated Temperature	60 to 160°F [16 to 71°C]
Temperature Shift Zero	±0.01% of R.O./°F [±0.018% of R.O./°C]
Temperature Shift Span	±0.005% of Load/°F [±0.009% of Load/°C]
CALIBRATION	
Load Calibration Test Excitation	5 VDC
Load Calibration (standard)	Certificate of Conformance
Load Calibration (available)	5-pt Tension and Compression
CONFORMITY	
RoHS	EU 2015/863
CE	EN55011; EN61326-1

Model LSM100

FEATURES

Non-loading surface, do not contact

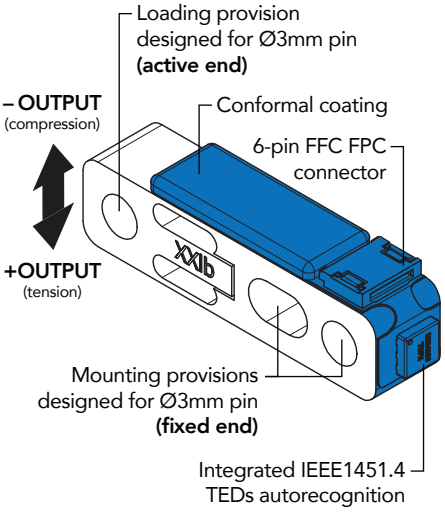

MOUNTING

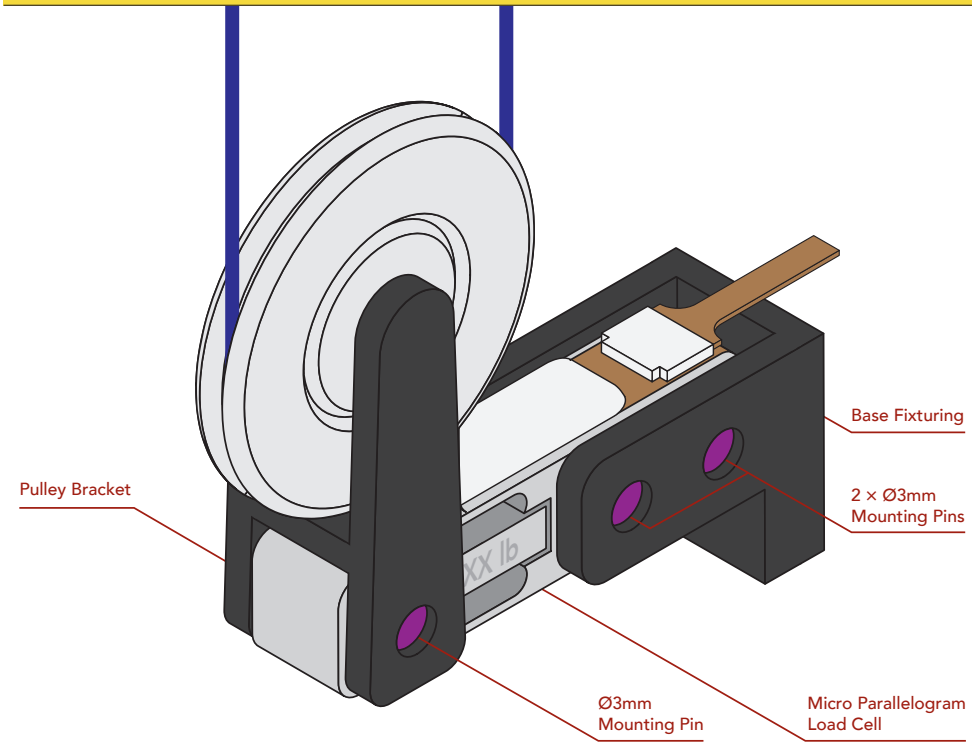

6 POSTION FFC FPC CONNECTOR

PIN #	WIRING CODE
1	– EXCITATION
2	+ SIGNAL
3	– SIGNAL
4	+ EXCITATION
5	TEDS GND
6	TEDS DATA

CAPACITIES

ITEM #	CAPACITY (lb/N)	OUTPUT (mV/V) Nom.	Deflection (in./mm)	Natural Frequency (kHz)
FSH04834	5/22.2	1	0.0005/0.0127	11
FSH04835	10/44.5	2	0.0010/0.0254	11
FSH04836	25/111.2	1.75	0.0010/0.0254	20
FSH04837	50/222.4	1.75	0.0015/0.0381	25

19 Morgan, Irvine, CA 92618 USA
futek@futek.com

www.futek.com

RoHS

ANSI Z540-1 · ISO 17025 · ISO 9001 · ISO 13485 · U.S. Manufacturer

Model LSM100

DIMENSIONS inches [mm]

TOLERANCE:
.X ±.1" [2.5]
.XX ±.01" [0.25]
.XXX ±.005" [0.127]

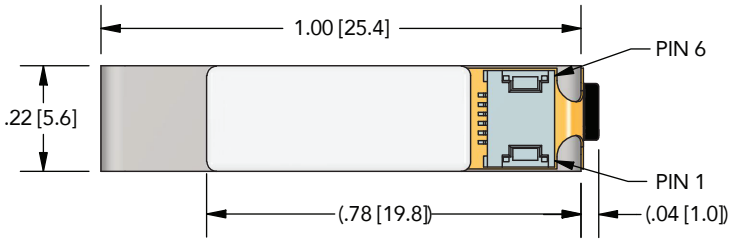

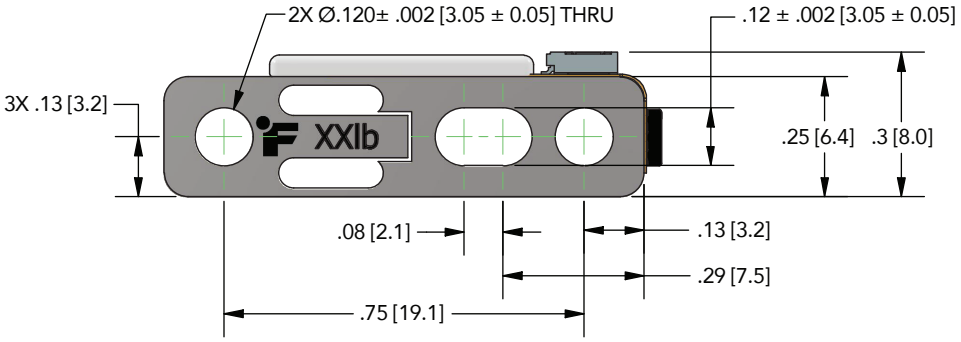

SCIENCE GATE
Your Automation Partner

SCIGATE AUTOMATION (S) PTE LTD
No.1 Bukit Batok Street 22 #01-01 Singapore 659592
Tel: (65) 6561 0488 **Fax: (65) 6562 0588**
Email: sales@scigate.com.sg Web: www.scigate.com.sg
Business Hours: Monday - Friday 8.30am - 6.15pm

Drawing Number: FI1591

FUTEK reserves the right to modify its design and specifications without notice. Please visit https://www.futek.com/terms-of-sale for complete terms and conditions.

The information provided herein was developed using FEA analysis, empirical data and multiple testing simulations. FUTEK presents the information in good faith and believes it is correct but makes no representations or warranties as to the completeness or accuracy of the information provided. User's application may produce different data and/or results. By using this information, you agree that you have read and understand this disclosure. Please contact us to discuss your particular application and needs.

19 Morgan, Irvine, CA 92618 USA
futek@futek.com

www.futek.com

RoHS
ANSI Z540-1
ISO 17025
ISO 9001
ISO 13485
U.S. Manufacturer