## BODY

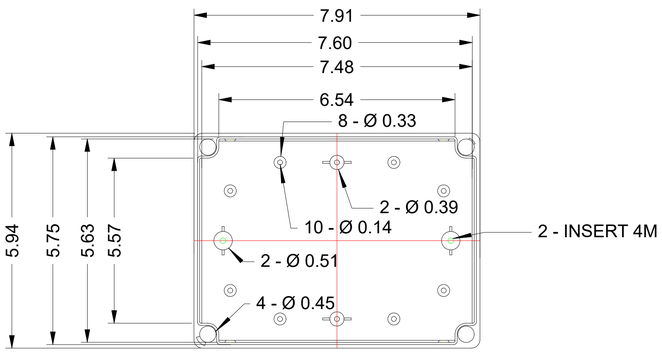


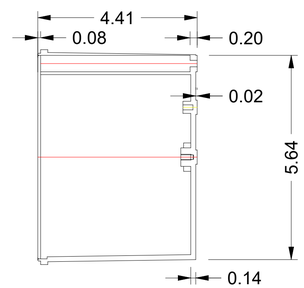


## COVER

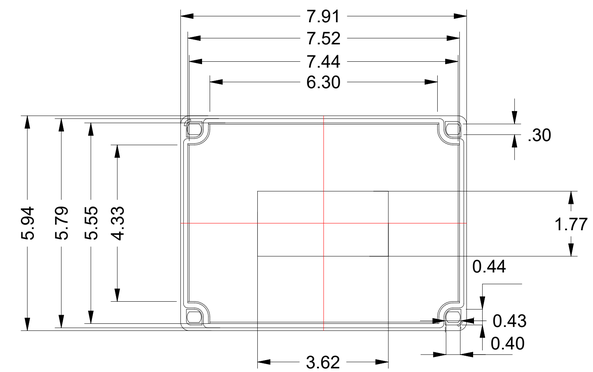


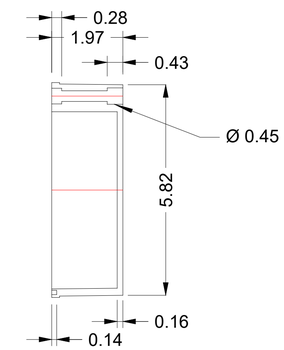


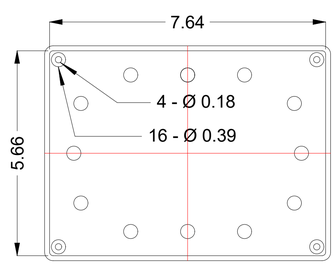


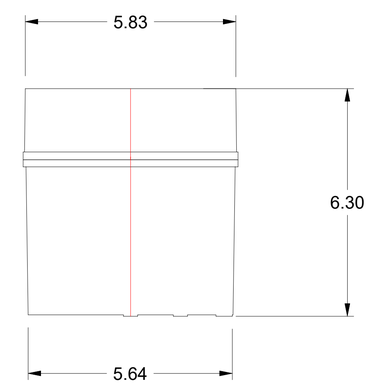


## BOTTOM VIEW

NOTES: ALL DIMENSIONS SHOWN ARE IN INCHES.

SCIENCE GATE
Your Automation Partner
SCIGATE AUTOMATION (S) PTE LTD
No.1 Bukit Batok Street 22 #01-01 Singapore 659592
**Tel: (65) 6561 0488** **Fax: (65) 6562 0588**
Email: sales@scigate.com.sg Web: www.scigate.com.sg
Business Hours: Monday - Friday 8.30am - 6.15pm

FLOWLINE, INC.
LOS ALAMITOS, CA 90720

DRAWN
P. Colin
02/01/2016

LM91-1001 ENCLOSURE
DRAWING FILE
301687 REV A

SCALE 1:2 | SIZE D (34 x 22) | SHEET 1 OF 1